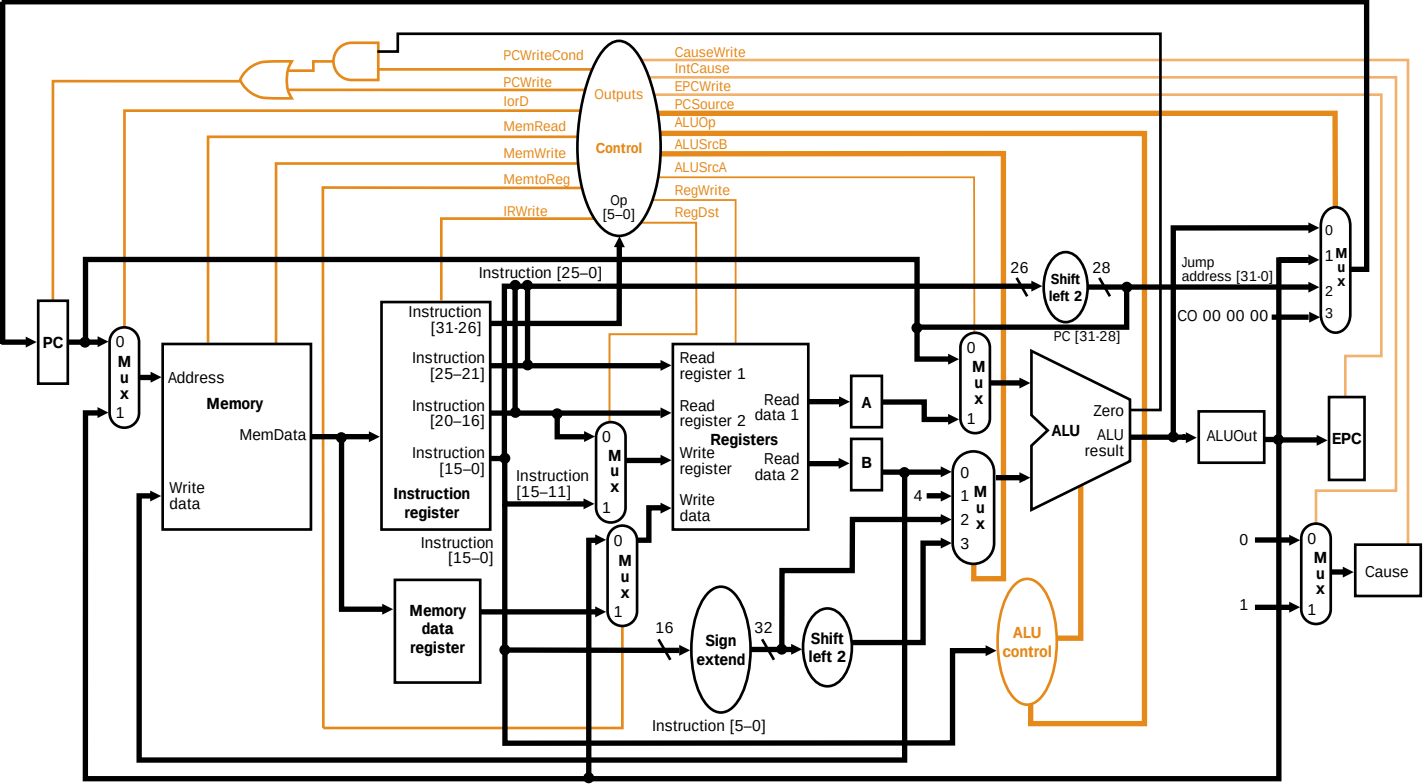
PCWriteCond
PCWrite
IorD
MemRead
MemWrite
MemtoReg
IRWrite
Outputs
Control
Op [5–0]
CauseWrite
IntCause
EPCWrite
PCSource
ALUOp
ALUSrcB
ALUSrcA
RegWrite
RegDst
PC
0 M u x 1
Address
Memory
MemData
Write data
Instruction [31-26]
Instruction [25–21]
Instruction [20–16]
Instruction [15–0]
Instruction register
Instruction [25–0]
Instruction [15–11]
Instruction [15–0]
Memory data register
Read register 1
Read register 2
Registers
Write register
Write data
Read data 1
Read data 2
A
B
4
16
Sign extend
32
Shift left 2
Instruction [5–0]
26
Shift left 2
28
PC [31-28]
ALU
Zero
ALU result
ALU control
ALUOut
EPC
Jump address [31-0]
CO 00 00 00
Cause

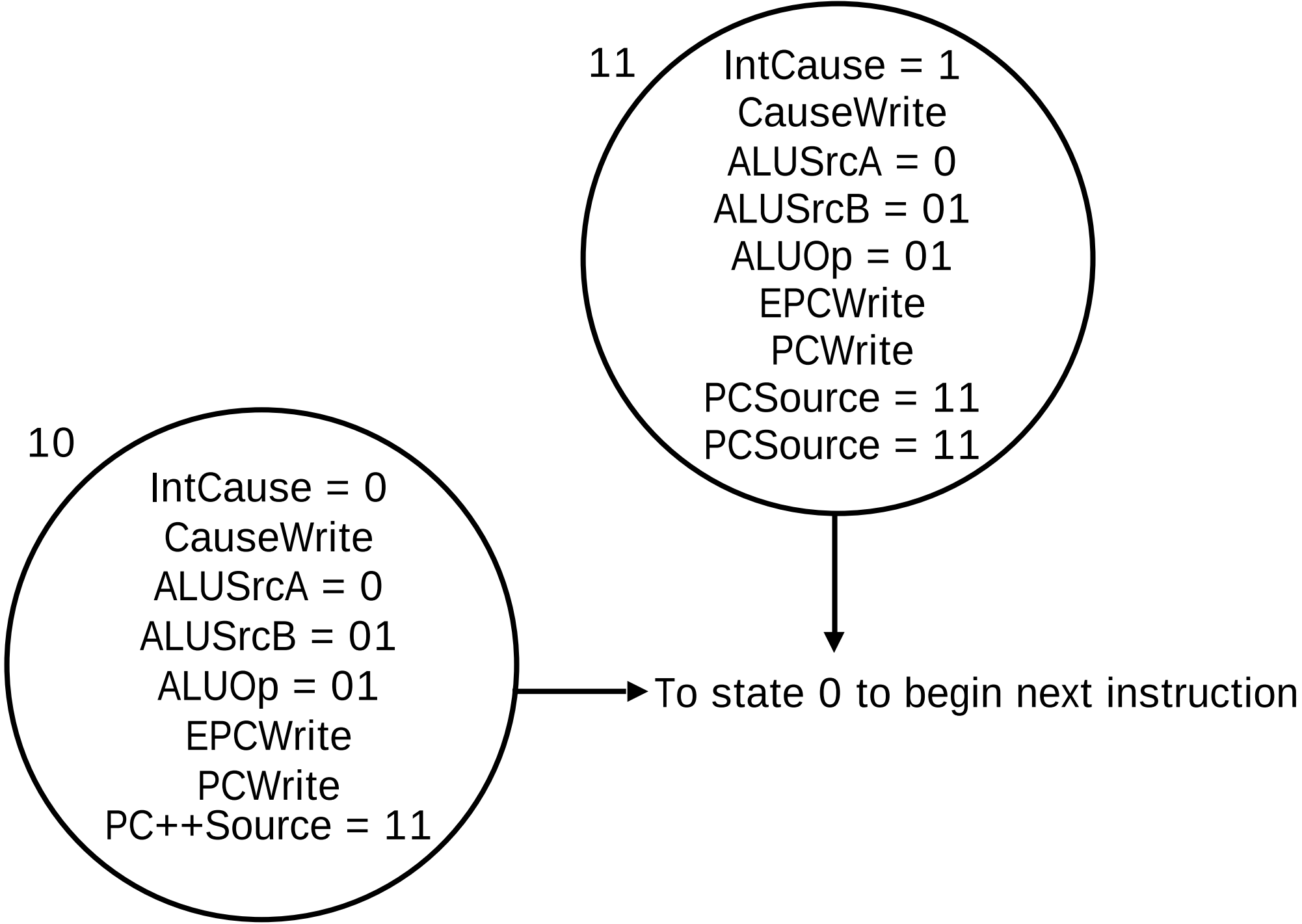
11
IntCause = 1
CauseWrite
ALUSrcA = 0
ALUSrcB = 01
ALUOp = 01
EPCWrite
PCWrite
PCSource = 11
PCSource = 11
10
IntCause = 0
CauseWrite
ALUSrcA = 0
ALUSrcB = 01
ALUOp = 01
EPCWrite
PCWrite
PC++Source = 11
To state 0 to begin next instruction

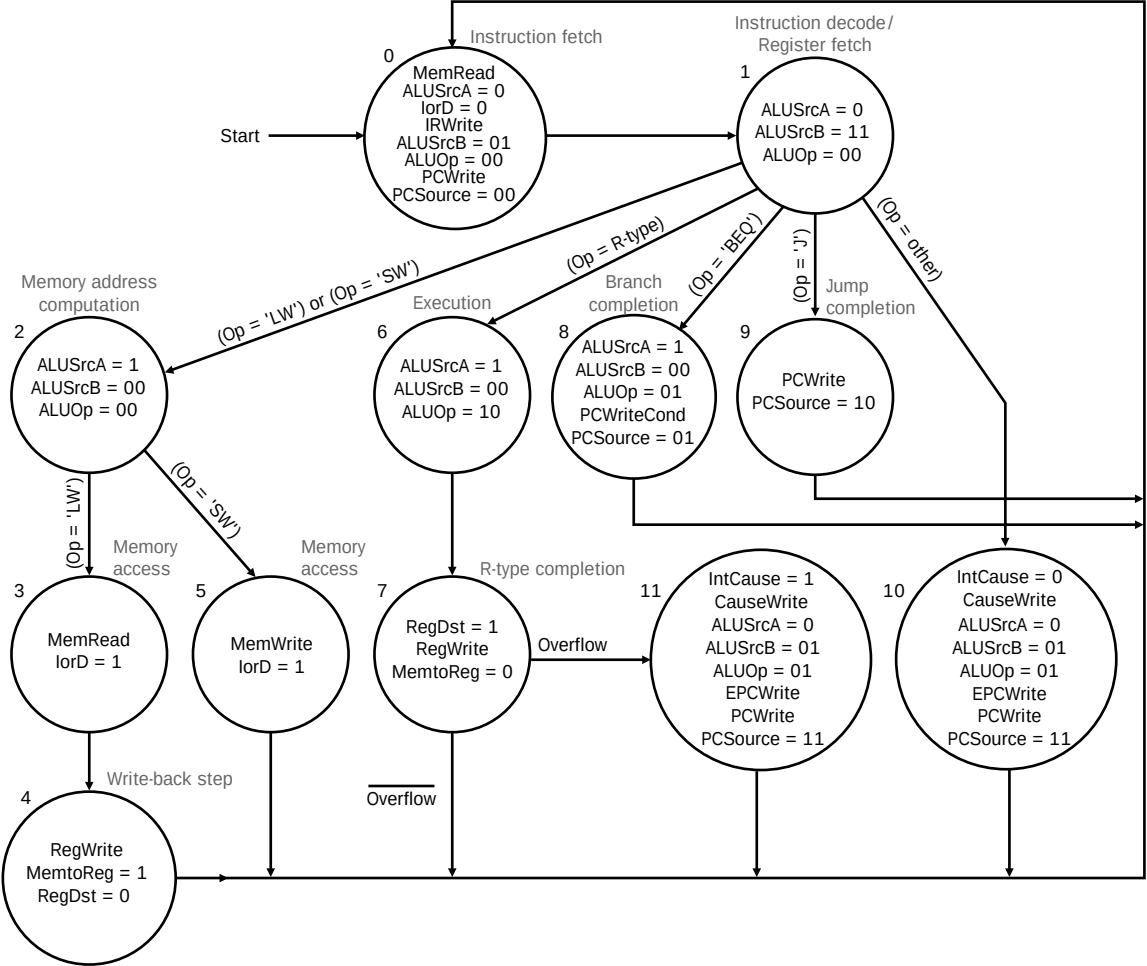
Instruction fetch
0
MemRead
ALUSrcA = 0
IorD = 0
IRWrite
ALUSrcB = 01
ALUOp = 00
PCWrite
PCSource = 00
Start
Instruction decode/
Register fetch
1
ALUSrcA = 0
ALUSrcB = 11
ALUOp = 00
(Op = 'LW') or (Op = 'SW')
(Op = R-type)
(Op = 'BEQ')
(Op = 'J')
(Op = other)
Memory address
computation
2
ALUSrcA = 1
ALUSrcB = 00
ALUOp = 00
Execution
6
ALUSrcA = 1
ALUSrcB = 00
ALUOp = 10
Branch
completion
8
ALUSrcA = 1
ALUSrcB = 00
ALUOp = 01
PCWriteCond
PCSource = 01
Jump
completion
9
PCWrite
PCSource = 10
(Op = 'LW')
(Op = 'SW')
Memory
access
3
MemRead
IorD = 1
Memory
access
5
MemWrite
IorD = 1
R-type completion
7
RegDst = 1
RegWrite
MemtoReg = 0
Overflow
11
IntCause = 1
CauseWrite
ALUSrcA = 0
ALUSrcB = 01
ALUOp = 01
EPCWrite
PCWrite
PCSource = 11
10
IntCause = 0
CauseWrite
ALUSrcA = 0
ALUSrcB = 01
ALUOp = 01
EPCWrite
PCWrite
PCSource = 11
Write-back step
4
RegWrite
MemtoReg = 1
RegDst = 0
Overflow